item	value
Packing Size	88*30*30cm
Weight	370 g/pc
Control	Semi-automatic
Open Diameter	106cm
Brand Name	Lotus
Function	Rain Sun Proof
Color	Optional
Logo	Customizable Logo Printing
Ribs	Fiberlass Ribs
Payment Terms	L/C, T/T,Western Union
Trade Terms	EXW, FOB(Ningbo, shanghai)

Comfortable and convenient
One hand operation

Fiberglass umbrella bones, strong and light

Integrative tips, make the fabric stronger

Color belt, metal buttons

Metal umbrella roof, beautiful and generous
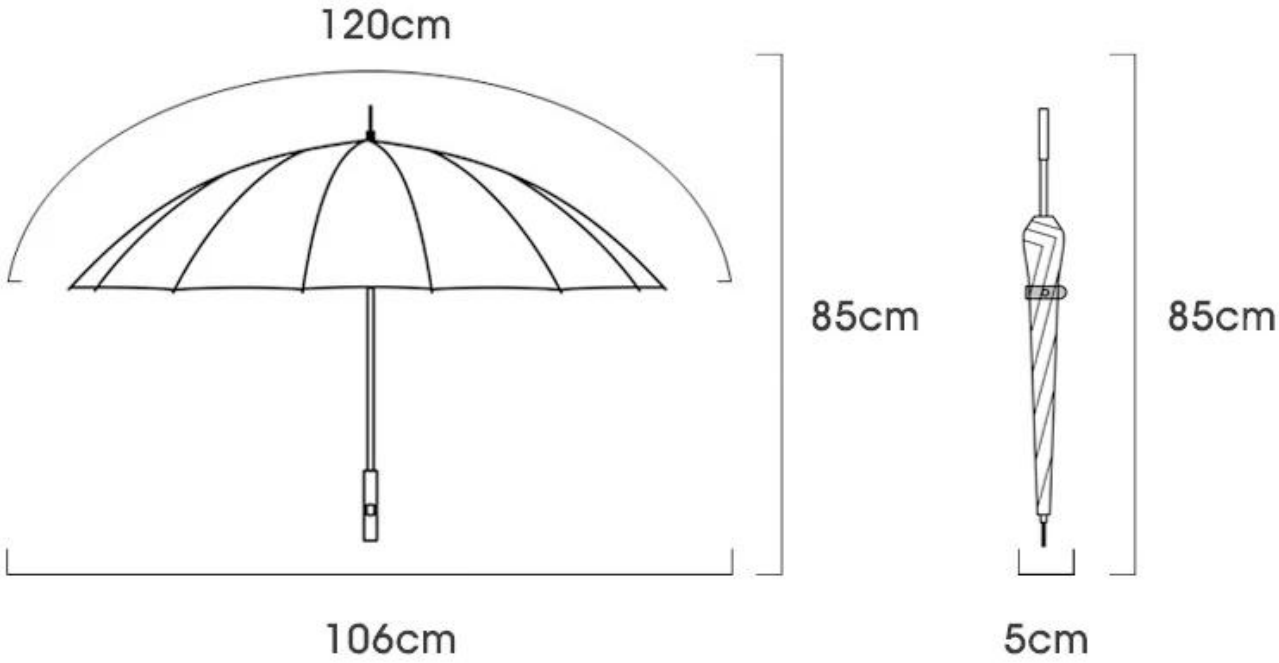
Size