Product Name	umbrella
Size	23''*16K
Fabric	190T polyester
Frame	Fiberglass frame
Packaging	1Pcs/OPP, 50Pcs/Ctn
Usage	Waterproof,Windproof,Promotion,Sun umbrella
Color	Customized
MOQ	50Pcs
Sample time	3-7 days
lead time	10-35 days after confirming the order
Payment Terms	L/C, T/T,Western Union
Trade Terms	EXW, FOB(Ningbo, shanghai)

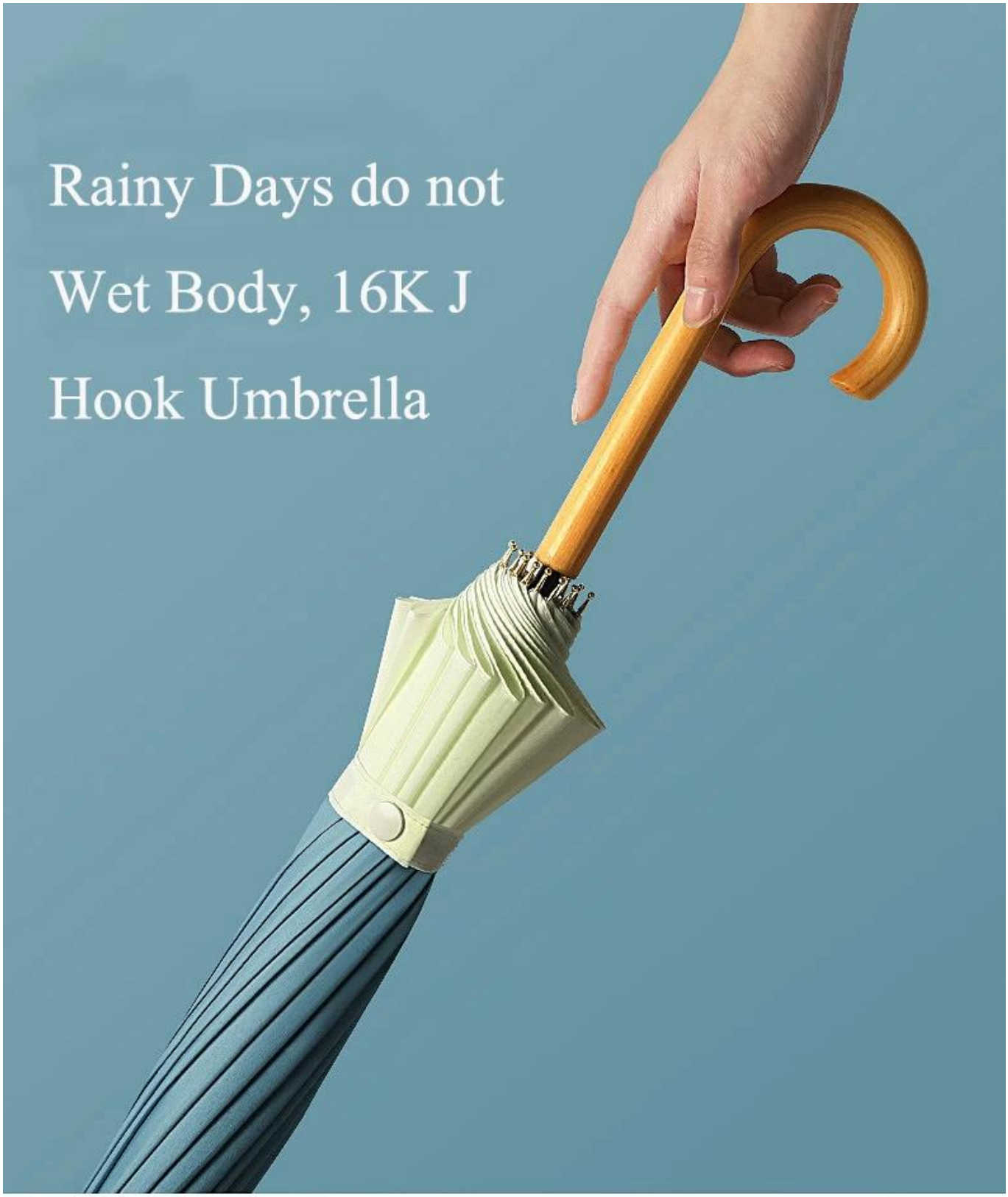
Rainy Days do not
Wet Body, 16K J
Hook Umbrella

Commercial umbrella

Three folding

UPF
UPF⩾50+

Strengthening

Paintcoat

Highdensity

Wind proof

Product Size

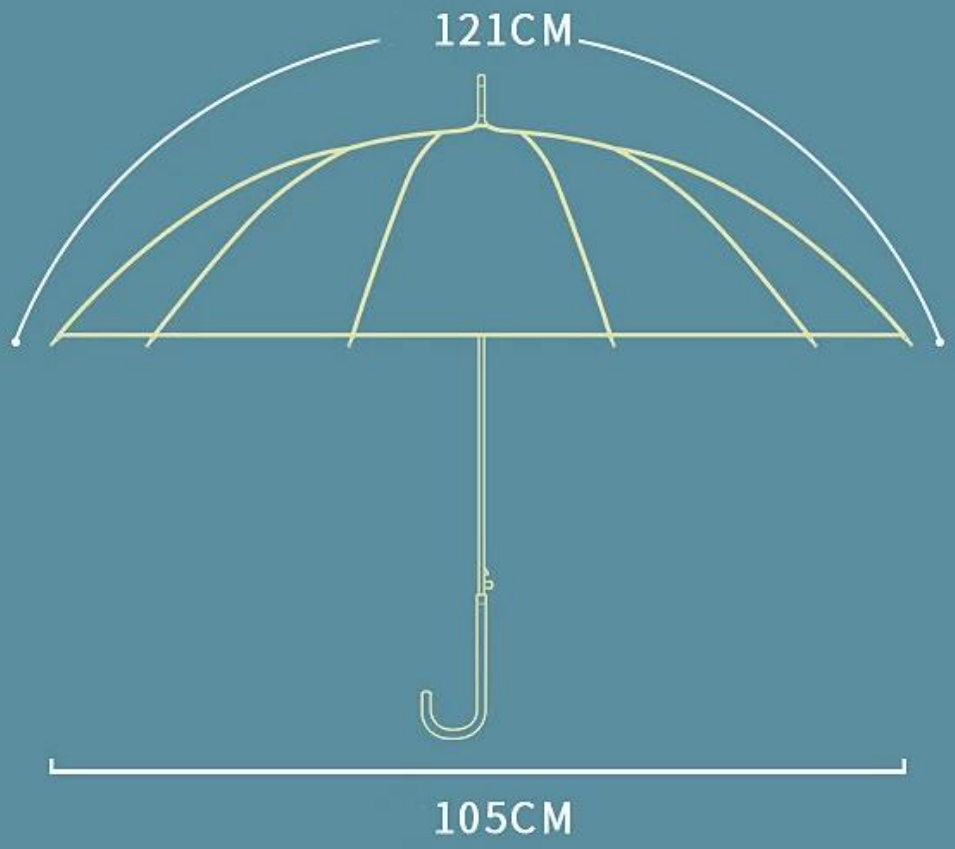

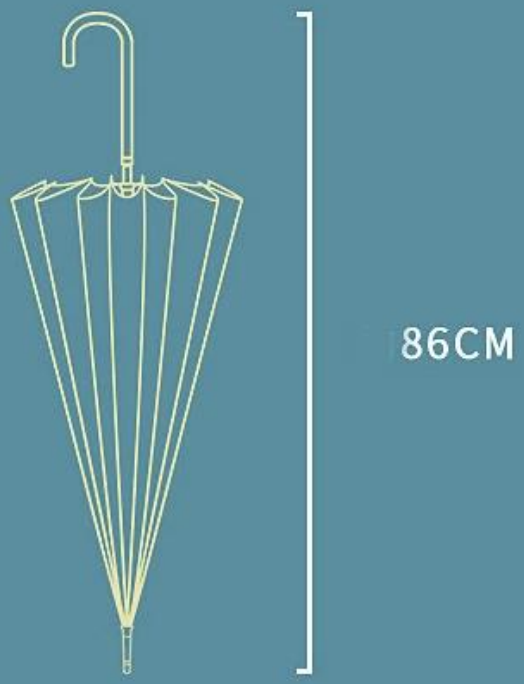

Product Details

16K strong umbrella frame