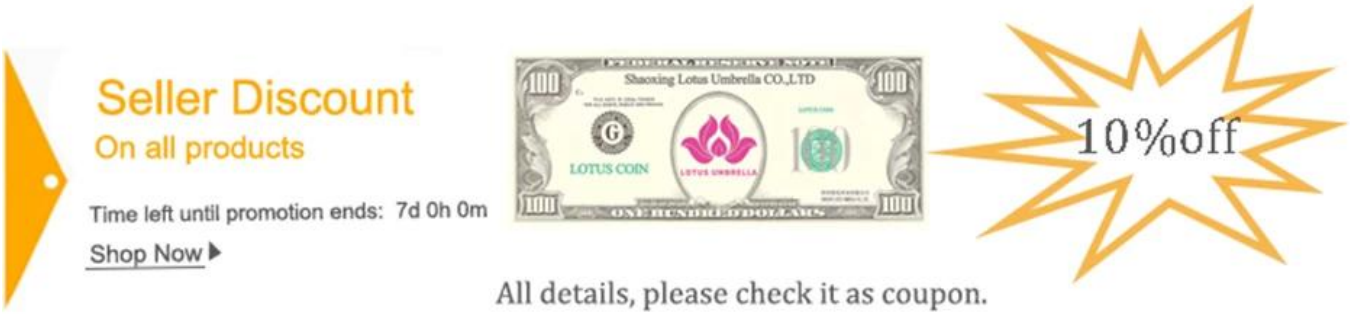

Size:	105*80cm
Fabric:	190T pongee
Frame:	Baking finish steel
Accessory:	Rubber
Printing:	Can print your Logo & Slogan
Packing:	50pcs/ctn
Usage:	outdoor adverting ,promotion,expand the market,sun block
Use Occasion:	Golf club,promotional gift,daily use
Advantage:	Super-windproof,Super-waterproof
MOQ:	100p
Sample Time:	3-7days
Delivery Time:	30days

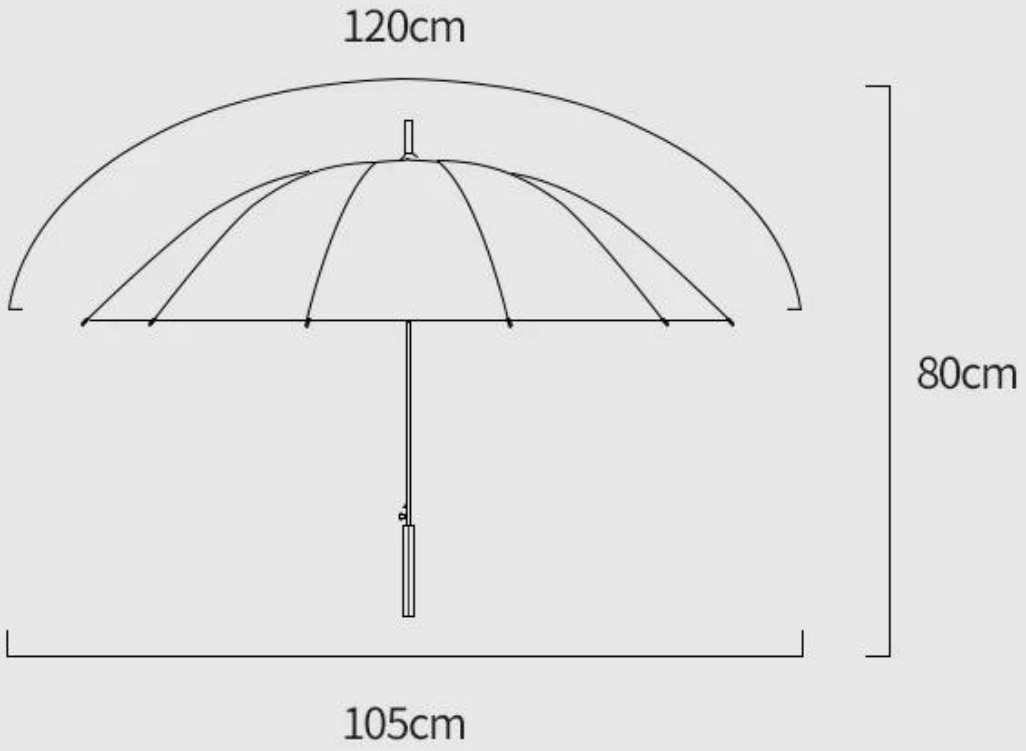
120cm
80cm
105cm

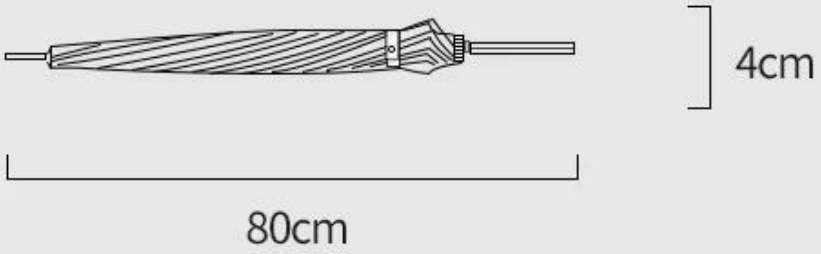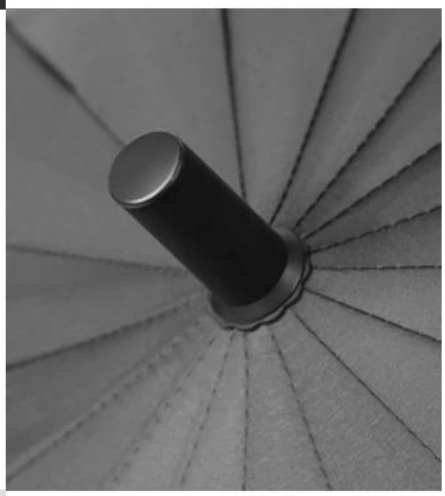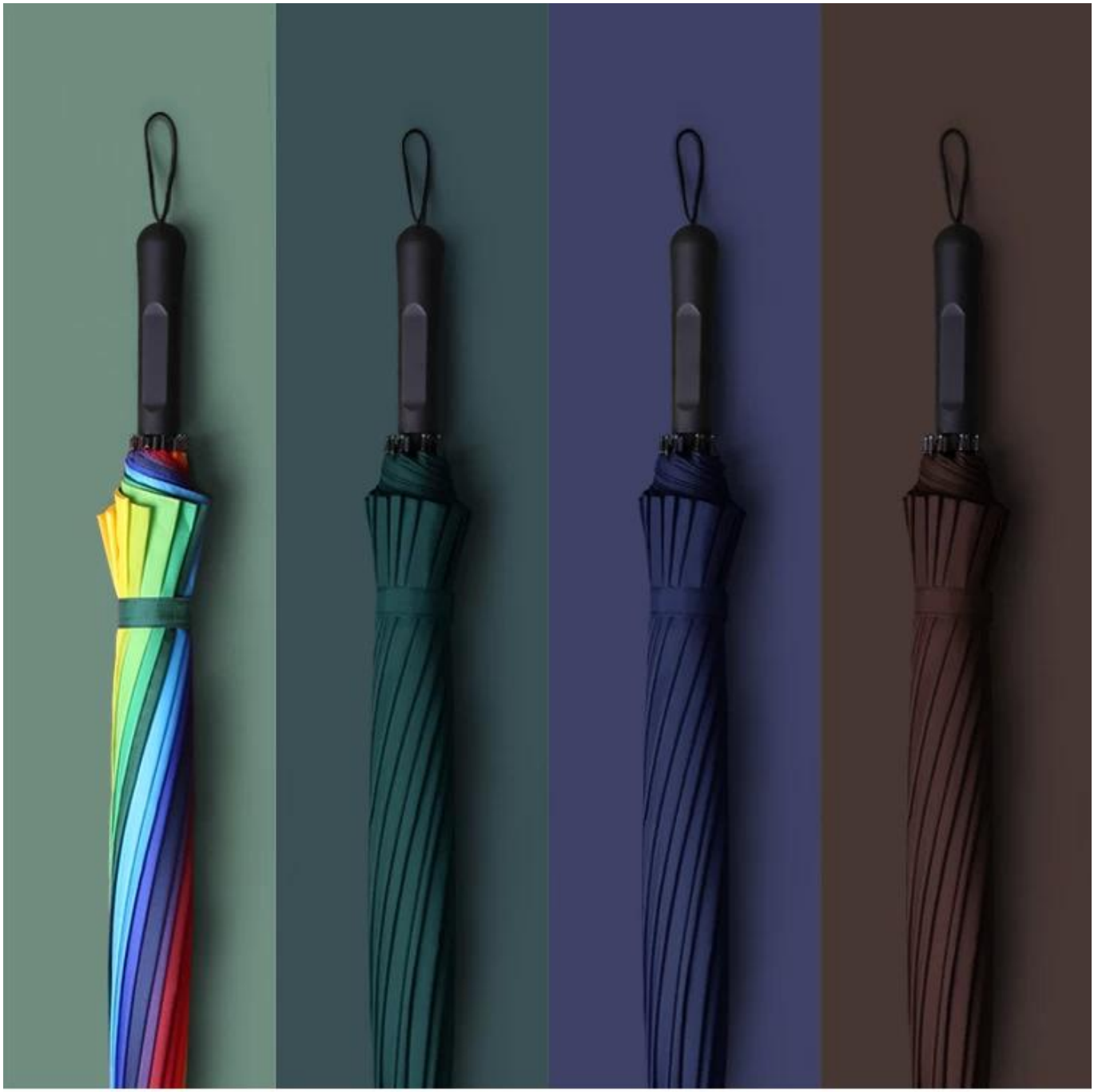
4cm
80cm