Seller Discount

On all products

Time left until promotion ends: 7d 0h 0m

Shop Now

10%off

All details, please check it as coupon.

Size:	80*16cm
Fabric:	190T Polyester/pongee
Frame:	metal
Accessory:	Plastic tibs and caps
Printing:	can print your Logo & Slogan
Packing:	50pcs/ctn
Usage:	outdoor adverting ,promotion,expand the market,sun block
Use Occasion:	Golf club,promotional gift,daily use
Advantage:	Super-windproof,Super-waterproof
MOQ:	100pcs
Sample Time:	3-7days
Delivery Time:	30days

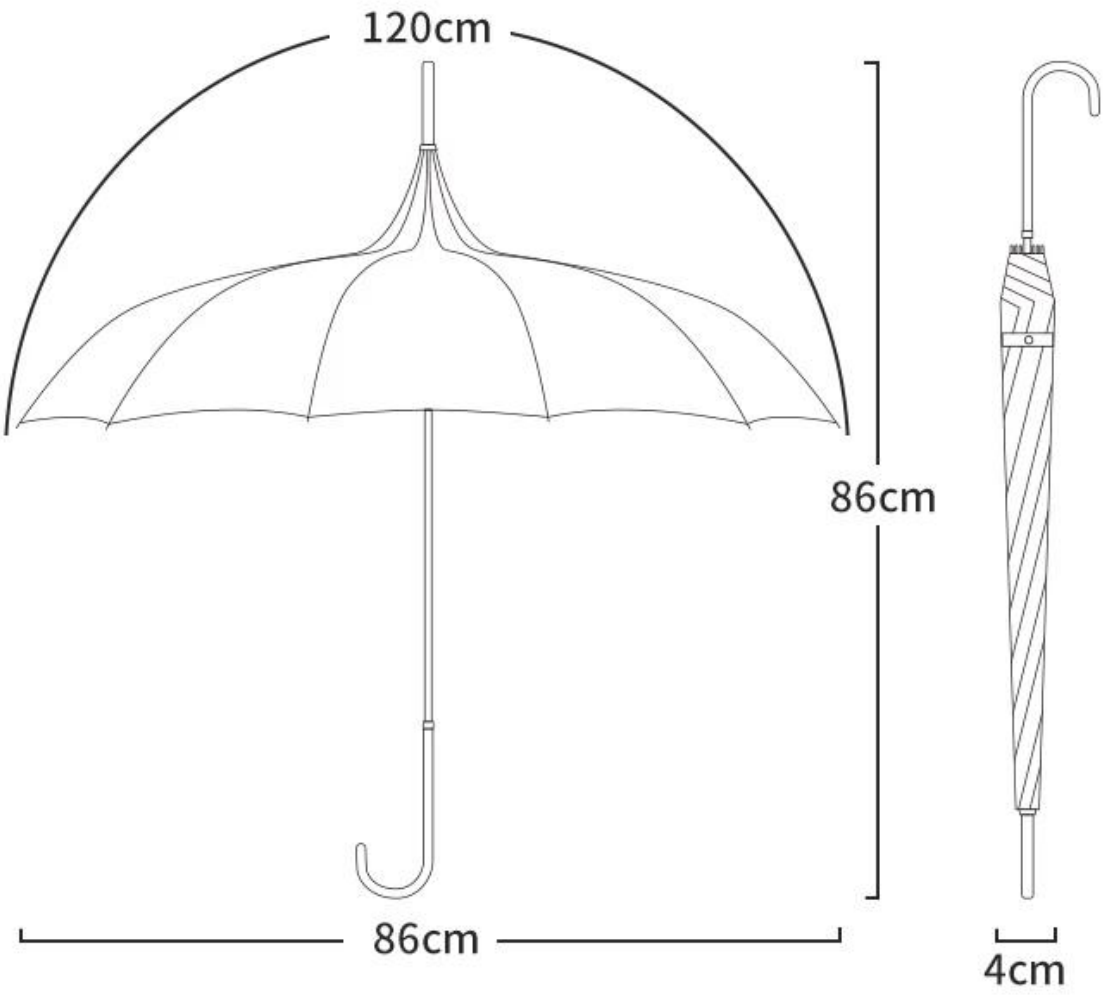
120cm
86cm
86cm
4cm

...