Product Name	umbrella
Size	125cm,140cm
Fabric	Pongee
Frame	Steel
Packaging	1Pcs/OPP, 50Pcs/Ctn
Usage	Waterproof,Windproof,Promotion,Sun umbrella
Color	Customized
MOQ	50Pcs
Sample time	3-7 days
lead time	10-35 days after confirming the order
Payment Terms	L/C, T/T,Western Union
Trade Terms	EXW, FOB(Ningbo, shanghai)

Before
Using
70°C
VS
After
Using
30°C
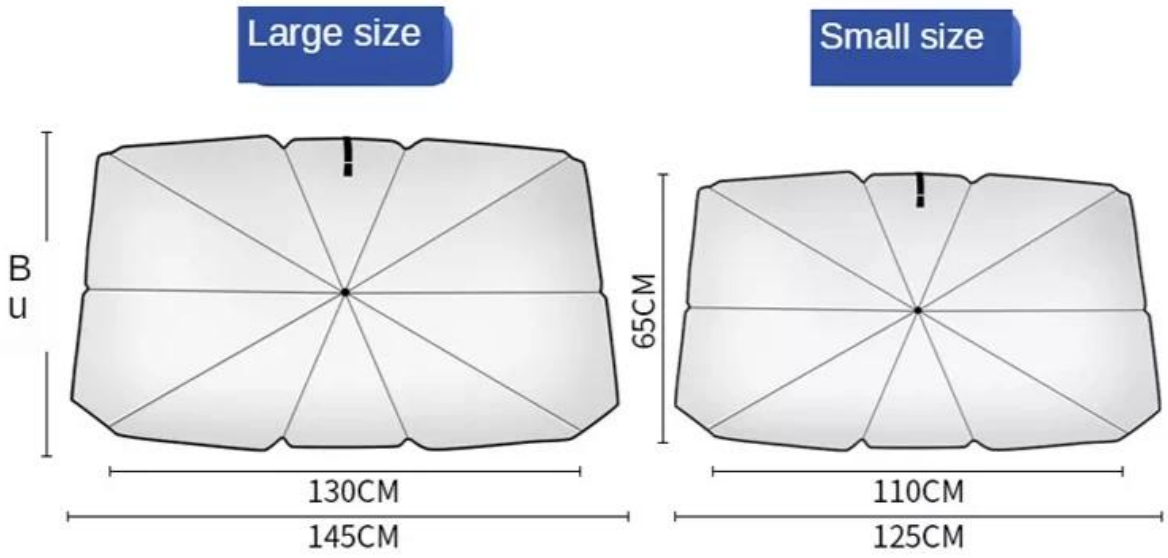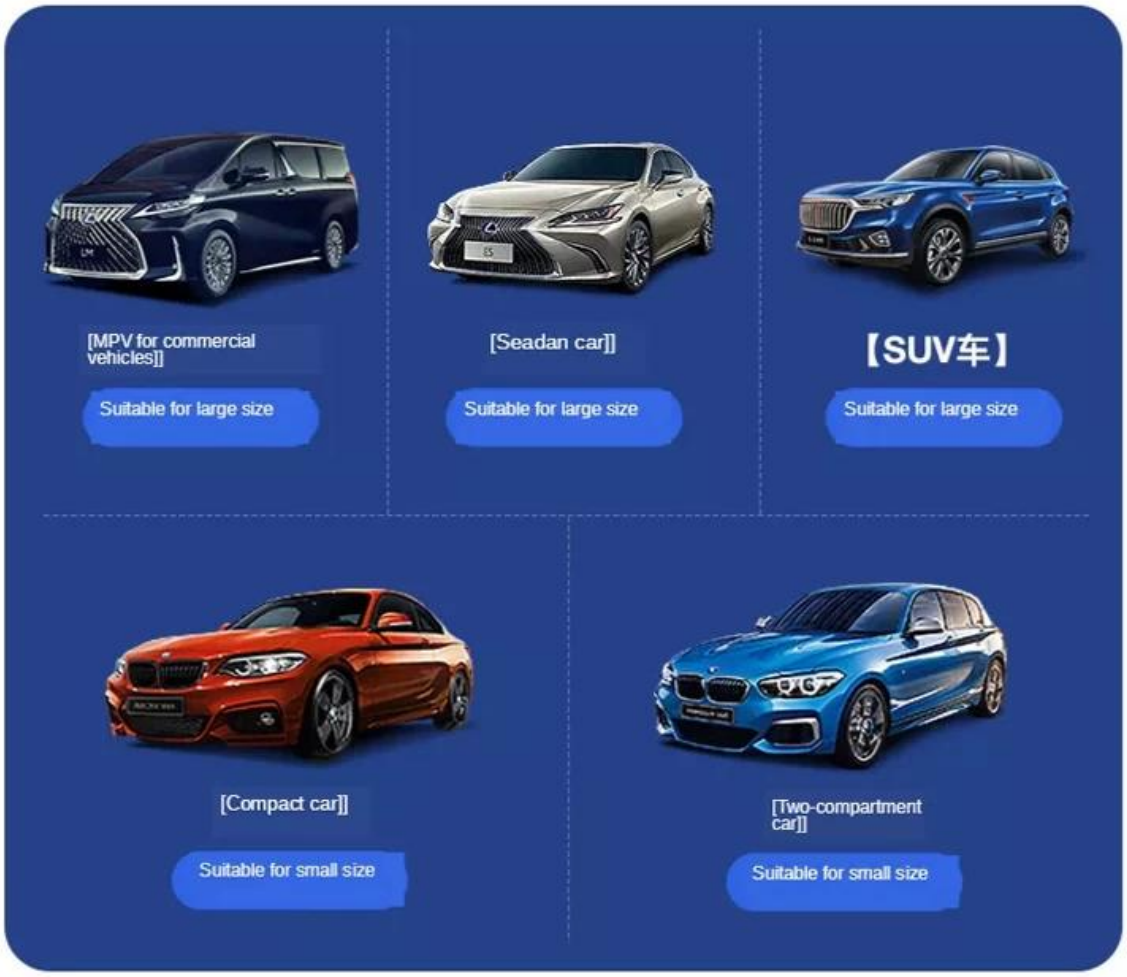
Suitable assorted styles