Brand Name	Lotus
Color	Multi-colors
Handle	Plastic Handle
Style	Straight Umbrellla
Printing	Customer's Logo
Size	100cm
Shaft	Black Plated Shaft
Fabric	POE Fabric
MOQ	2pcs

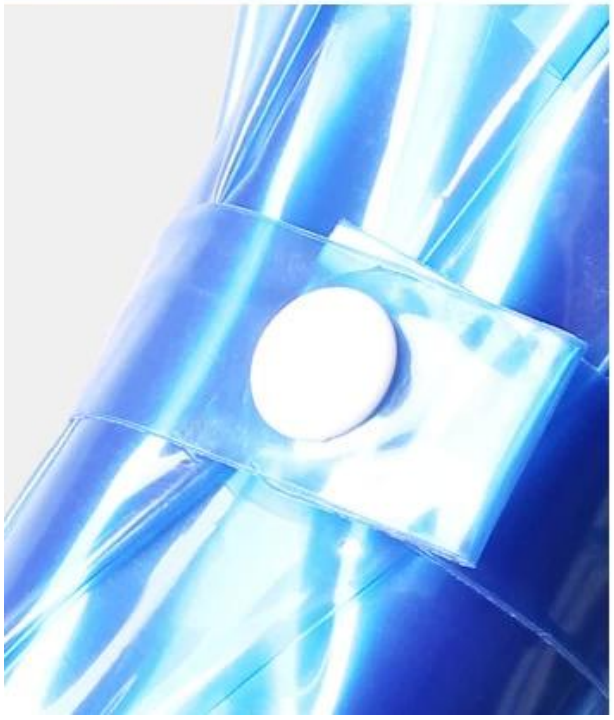

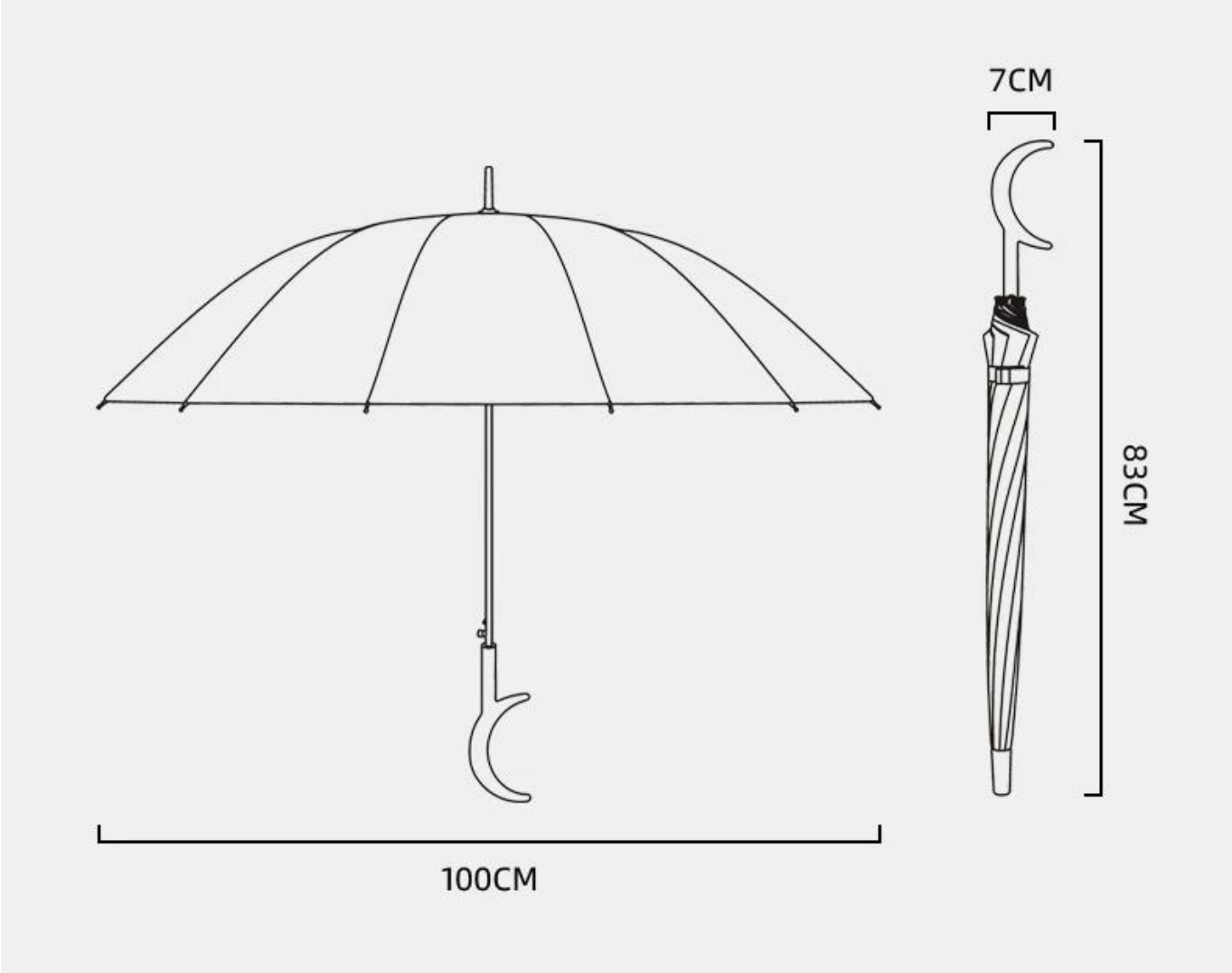
7CM
83CM
100CM

0727

0707