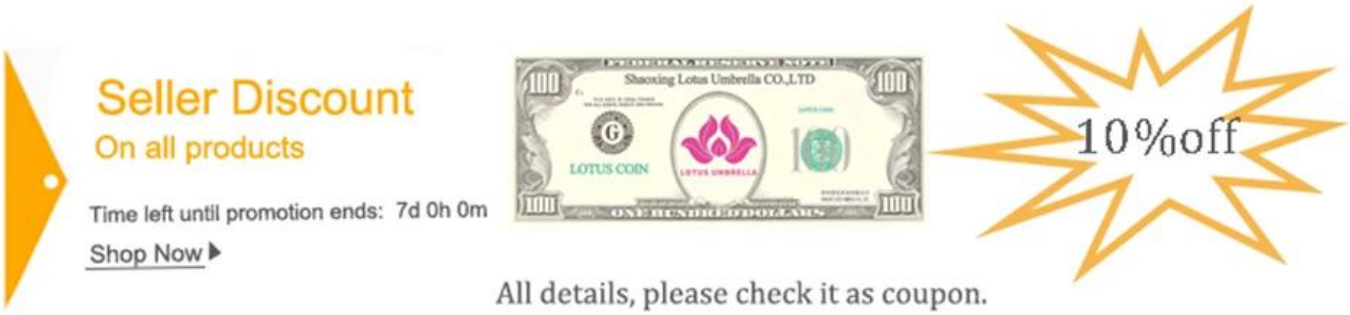


| | |
|---|---|
| Size: | 80*16cm |
| Fabric: | 190T Polyester/pongee |
| Frame: | metal |
| Accessory: | Plastic tibs and caps |
| Printing: | can print your Logo & Slogan |
| Packing: | 50pcs/ctn |
| Usage: | outdoor adverting ,promotion,expand the market,sun block |
| Use Occasion: | Golf club,promotional gift,daily use |
| Advantage: | Super-windproof,Super-waterproof |
| MOQ: | 100pcs |
| Sample Time: | 3-7days |
| Delivery Time: | 30days |

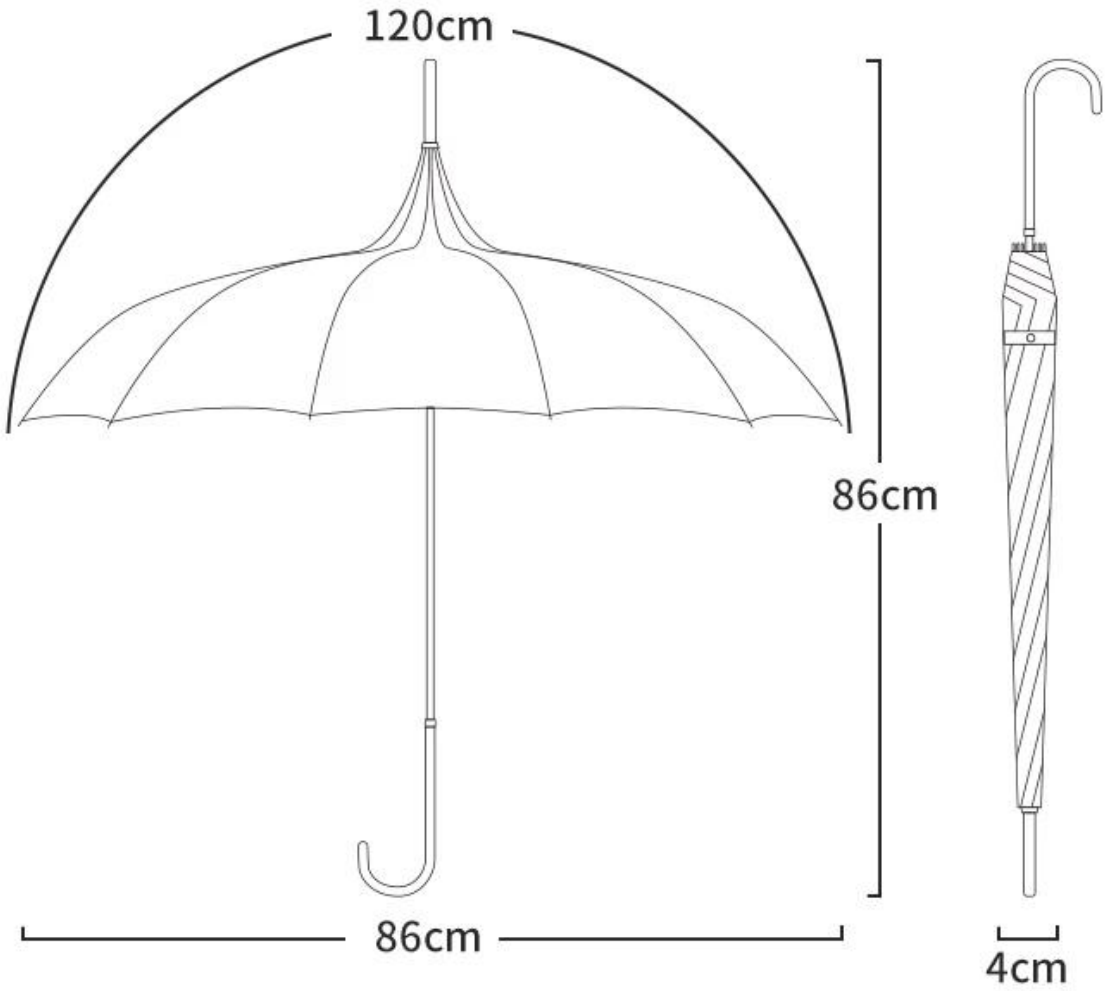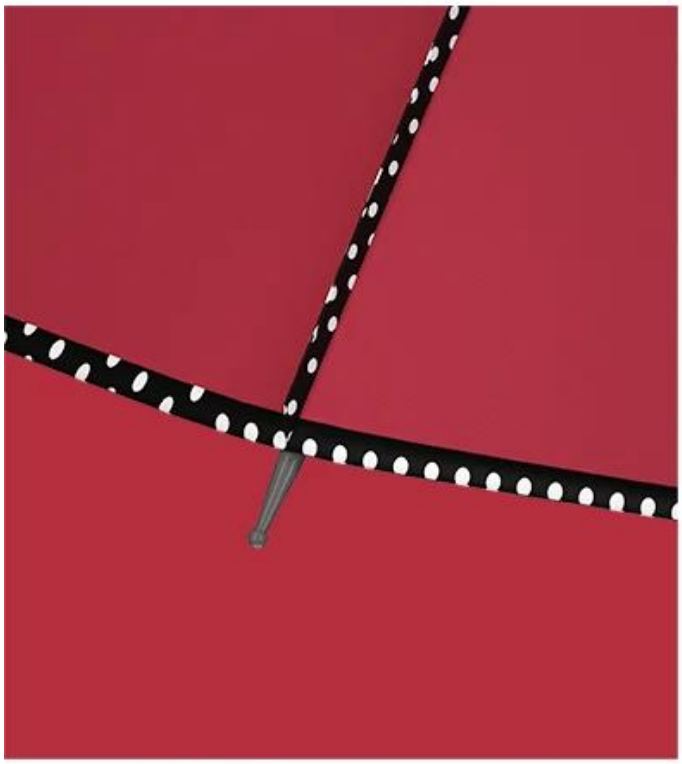
120cm
86cm
86cm
4cm